Published: 11-May-2011

Clutch - TDV6 2.7L Diesel -

Hydraulic fluid

Item	Specification
* Recommended hydraulic fluid	SHELL DONAX YB DOT4 ESL FLUID

CAUTION: * If the above fluid is not available, use a low viscosity DOT 4 brake fluid meeting ISO 4925 Class 6 and Land Rover LRES22BF03 requirements.

General Specifications

Item	Specification
Type	Diaphragm spring, hydraulically operated self-adjusting clutch with lead free friction facings coupled to a dual mass flywheel
Drive plate diameter	258 mm (10.15 in)
Pressure plate diameter	258 mm (10.15 in)
Clutch plate friction material	Raybestos 5088
Clutch plate thickness - Measured from outer face of plate to rivet:	
Drive plate - New	3.2 mm (0.125 in)
Service limit	0.2 mm (0.007 in)
Pressure plate - New	3.2 mm (0.125 in)
Service limit	0.2 mm (0.007 in)
Master cylinder	Integral with brake master cylinder
Slave cylinder	Incorporates quick release hydraulic pipe coupling and bleed valve

Torque Specifications

Description	Nm	lb-ft
* Clutch cover to flywheel bolts	25	18

*** Tighten bolts progressively by diagonal selection**

transmissionmanuals.com

Published: 11-May-2011

Clutch - TDV6 2.7L Diesel - Clutch

Description and Operation

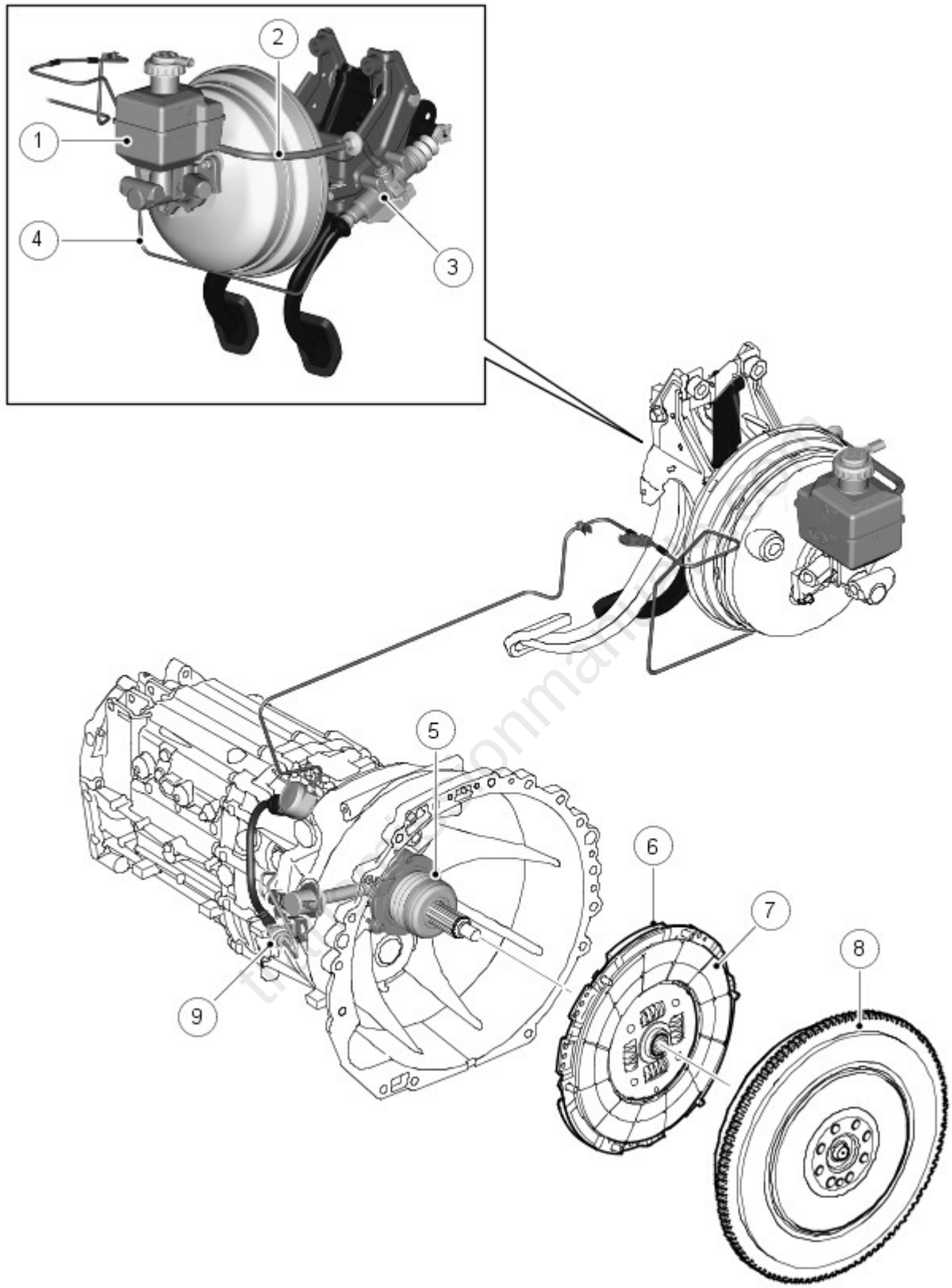

E50627

Item	Part Number	Description
1	-	Common brake/clutch fluid reservoir
2	-	Low pressure pipe
3	-	Clutch master cylinder
4	-	High pressure pipe
5	-	Concentric slave cylinder
6	-	Clutch cover assembly

7	-	Drive plate
8	-	Dual mass flywheel
9	-	Concentric slave cylinder outlet

GENERAL

The clutch system is based on the established principle of a single driven plate and diaphragm spring clutch cover assembly hydraulically actuated from the clutch pedal. Depressing the clutch pedal transfers hydraulic fluid through the master cylinder, pipework, and slave cylinder ultimately actuating the clutch fingers to release the clutch and thus disengage drive from the crankshaft. When your foot is off the pedal, the spring pushes the pressure plate against the clutch disc, which in turn presses against the flywheel, this locks the engine to the transmission input shaft, causing them to rotate at the same speed.

The clutch system is of conventional design comprising the following major components:

- Clutch master cylinder
- Clutch pressure pipes
- Release bearing/slave cylinder
- Clutch Cover assembly
- Clutch driven plate
- Dual mass flywheel

CLUTCH MASTER CYLINDER

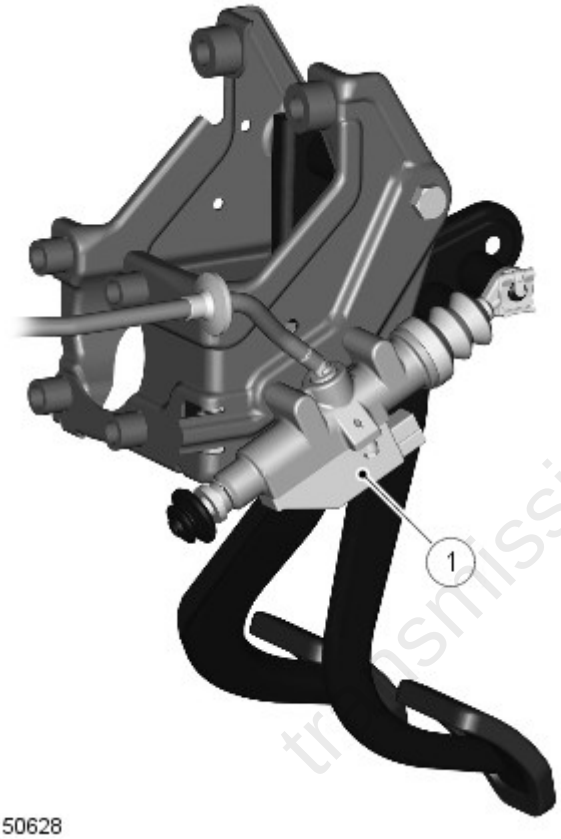

E50628

transmissionmanuals.com

Item	Part Number	Description
1	-	Clutch master cylinder

The clutch master cylinder is attached directly to the pedal box assembly, located in the driver's footwell.

The cylinder contains a piston assembly, with a push rod connected to the clutch pedal and spring. When the clutch pedal is depressed, it pushes on the piston, via a linkage. Pressure builds in the cylinder and lines as the clutch pedal is depressed further.

The cylinder has two hydraulic connections:

- A low pressure feed pipe (providing fluid supply from the brake fluid reservoir)
- A high pressure pipe

The cylinder also contains a linear transducer type sensor, which provides signals to various vehicle systems, for example, the electric park brake, engine calibration and the slip control system.
For additional information, refer to: Electronic Engine Controls (303-14A Electronic Engine Controls - TDV6 2.7L Diesel, Description and Operation).

The pedal travel is constrained by an 'up-stop, and a 'down-stop' contained within the master cylinder.

LOW-PRESSURE PIPE

The low-pressure pipe is a plastic pipe running between the master cylinder and the common brake fluid reservoir. The pipes function is to ensure the hydraulic system remains full. The pipes connections are of the push type and are located at each end.

HIGH-PRESSURE PIPES

The high-pressure pipes run from the clutch master cylinder to a point adjacent to the gearbox clutch housing, on the RH side of vehicle. The assembly consists a steel tubing and a flexible pipe. The flexible pipe is used to absorb movement between the metal tube, which is fixed to the vehicle body, and the transmission.

A vibration absorber is fitted in the pipe. The absorber is located at the front end of the transmission tunnel on RH side of vehicle and is fixed to a bracket on the body.

All high-pressure connections are of the 'quickfit' design utilising a 'U' shaped spring clip for retention.

CONCENTRIC SLAVE CYLINDER OUTLET ASSEMBLY



E50629

The concentric slave cylinder outlet assembly connects the external pipes with the release system contained within the clutch housing. A securing bracket locates the assembly in the correct orientation and a seal is provided between the assembly and the clutch housing. The bleed screw is also located at this point.

CONCENTRIC SLAVE CYLINDER

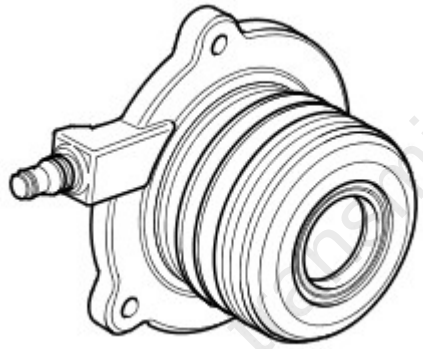

E50630

The concentric slave cylinder assembly contains the release bearing and the hydraulic slave cylinder. The assembly is attached to the front end of the transmission via 3 bolts. These bolts are asymmetrically positioned to ensure correct angular location of the slave cylinder, which is also spigot-mounted for positional fit. In its free condition the slave cylinder is fully extended, but it positions itself automatically as the clutch housing is fitted to the engine. The assembly requires no setting or adjustment.

CLUTCH COVER ASSEMBLY

The clutch cover assembly is known as a self-adjusting clutch with a nominal diameter of 260mm.

Self Adjusting Clutch

transmissionmanuals.com

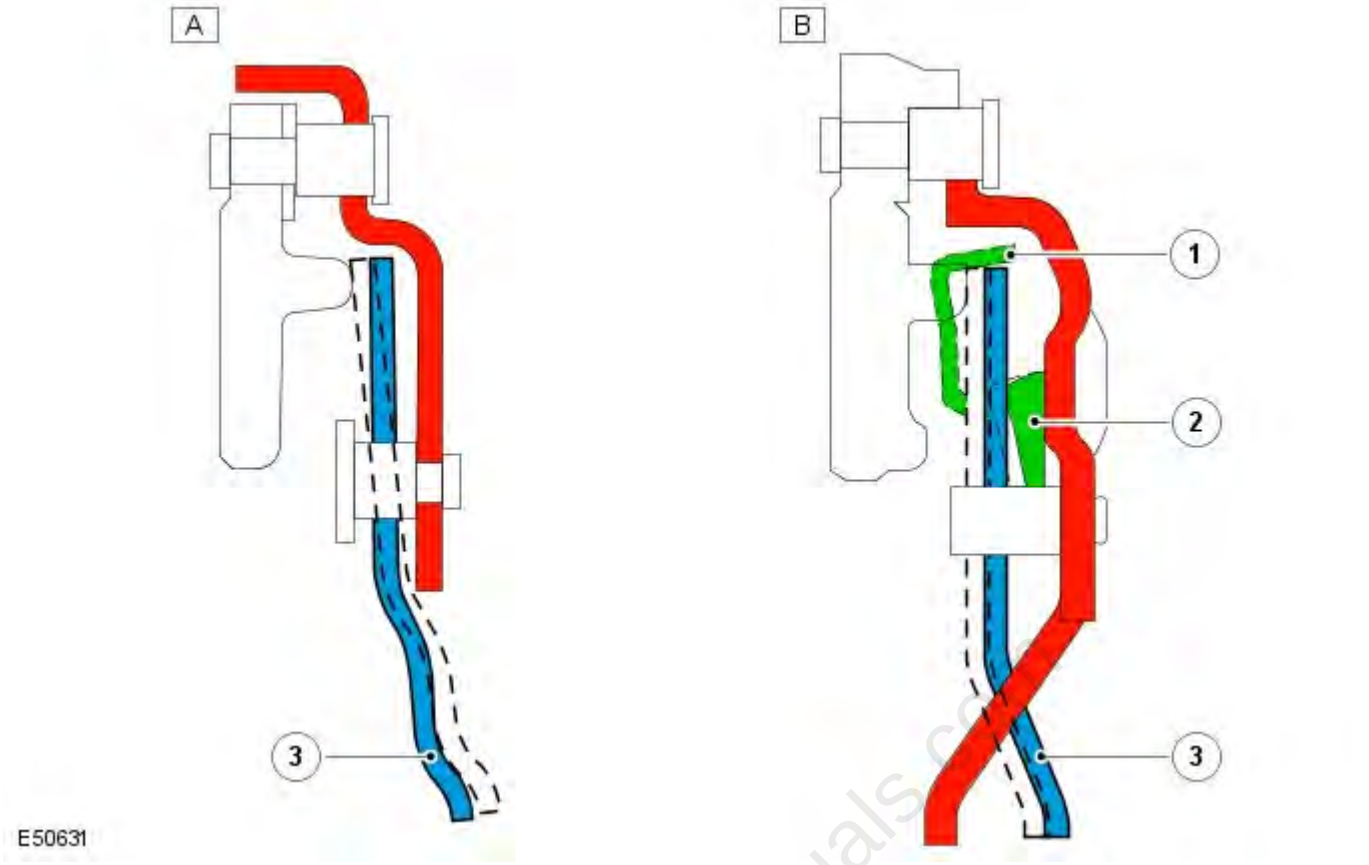

Item	Part Number	Description
A	-	Conventional clutch
B	-	Self adjusting clutch
1	-	Sensor spring
2	-	Adjuster ring
3	-	Diaphragm spring

The self-adjusting clutch contains a mechanism, which improves operation and driver comfort by enabling a more consistent pedal load as the friction faces wear, unlike conventional types of clutch which exhibit increasing pedal load with wear.

With a conventional clutch, facing wear causes the angle of the actuating diaphragm spring to change as the pressure plate moves axially towards the engine, requiring a greater force to operate the clutch (diaphragm actuating force varies with diaphragm angle). The self-adjusting clutch reduces this problem by allowing the diaphragm spring to follow the axial movement of the pressure plate thus maintaining the diaphragm spring at the same angle throughout the life of the clutch. As well as maintaining a more consistent pedal load, the clamp force on the pressure plate also remains constant with wear.

The diaphragm spring is not fixed at its rotation point like the conventional system but pivots between a sensor spring and an adjuster ring. The sensor spring provides a counter force, which is just sufficient to retain the diaphragm spring axially against the cover via the adjuster ring and during normal actuation of the clutch. As the linings wear, the tendency of the diaphragm angle to change causes an increase in the actuation force required to operate the clutch. When this increased effort exceeds the counter force of the sensor spring, the diaphragm spring moves axially towards the pressure plate until the original angle is restored. At this point the actuation force required drops to the level of the opposing sensor spring force, restoring equilibrium with the diaphragm spring at its new location.

During the axial movement of the diaphragm spring, the adjuster ring takes up the increased distance between the spring and cover. This ring contains raised segments, each having a ramp profile, which fits into a corresponding shape in the clutch cover. When the diaphragm spring moves axially for wear compensation, three pre-loaded coil springs in the clutch cover cause the adjuster ring to rotate, moving up the ramps and taking up the extra distance between the diaphragm spring and clutch cover.

• NOTE: During operation, the adjuster ring rotates in a clockwise direction, as viewed from the transmission. If, for any reason, a worn driven plate is replaced in service but the clutch cover assembly is to be reused, the adjuster ring must be rotated back to its pre-loaded position. This operation requires the use of a press to release load on the clutch whilst the adjuster ring is repositioned and is not recommended as a service action. However, It is recommended that a complete clutch cover assembly and driven plate are used together in any service repair.

• NOTE: If, for any reason, the clutch cover and driven plate are removed and the driven plate is found to be capable of further use, then the original cover/driven plate can be re-installed without the need for any adjustment.

CLUTCH DRIVE PLATE

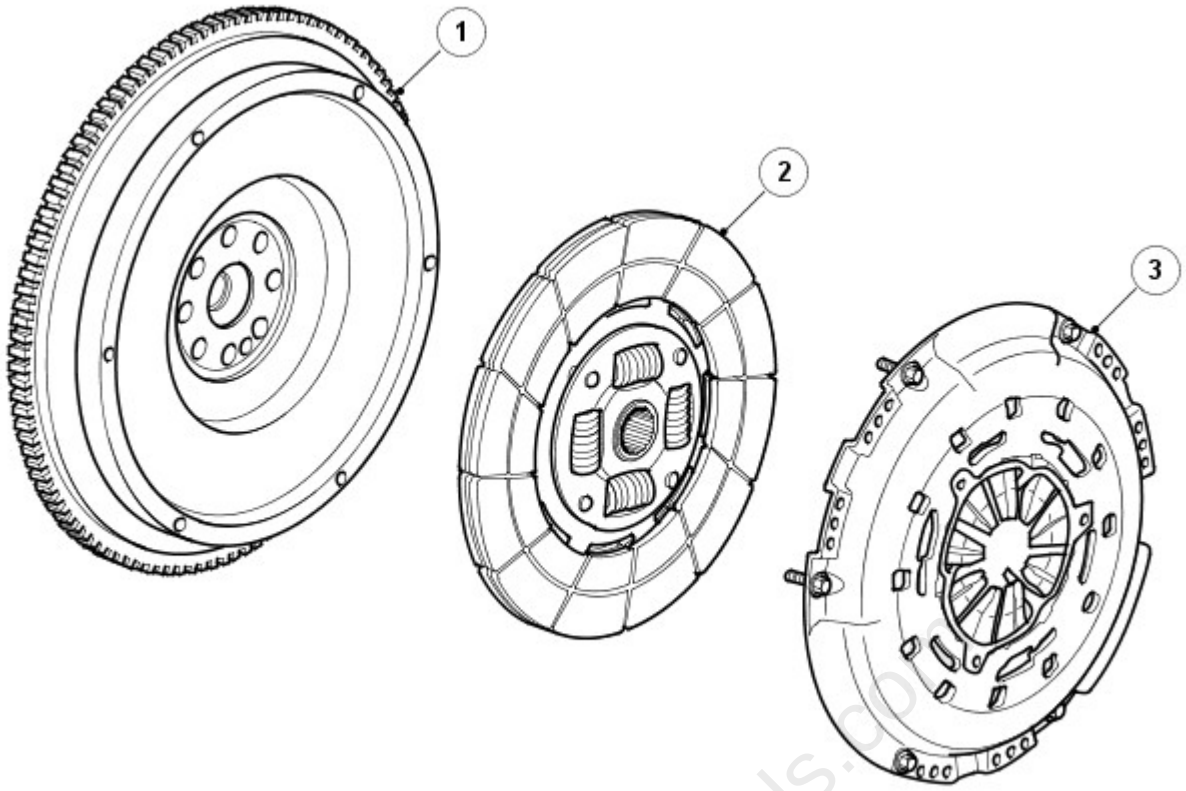

E47715

Item	Part Number	Description
1	-	Dual mass flywheel
2	-	Drive plate
3	-	Pressure plate

The clutch driven plate is of conventional design with a splined hub for locating the gearbox input spline. Lubricant is not required on this interface. The friction material, which is lead and asbestos free, is connected to the hub by a spring pack, which reduces torsional inputs into the transmission.

DUAL MASS FLYWHEEL

transmissionmanuals.com

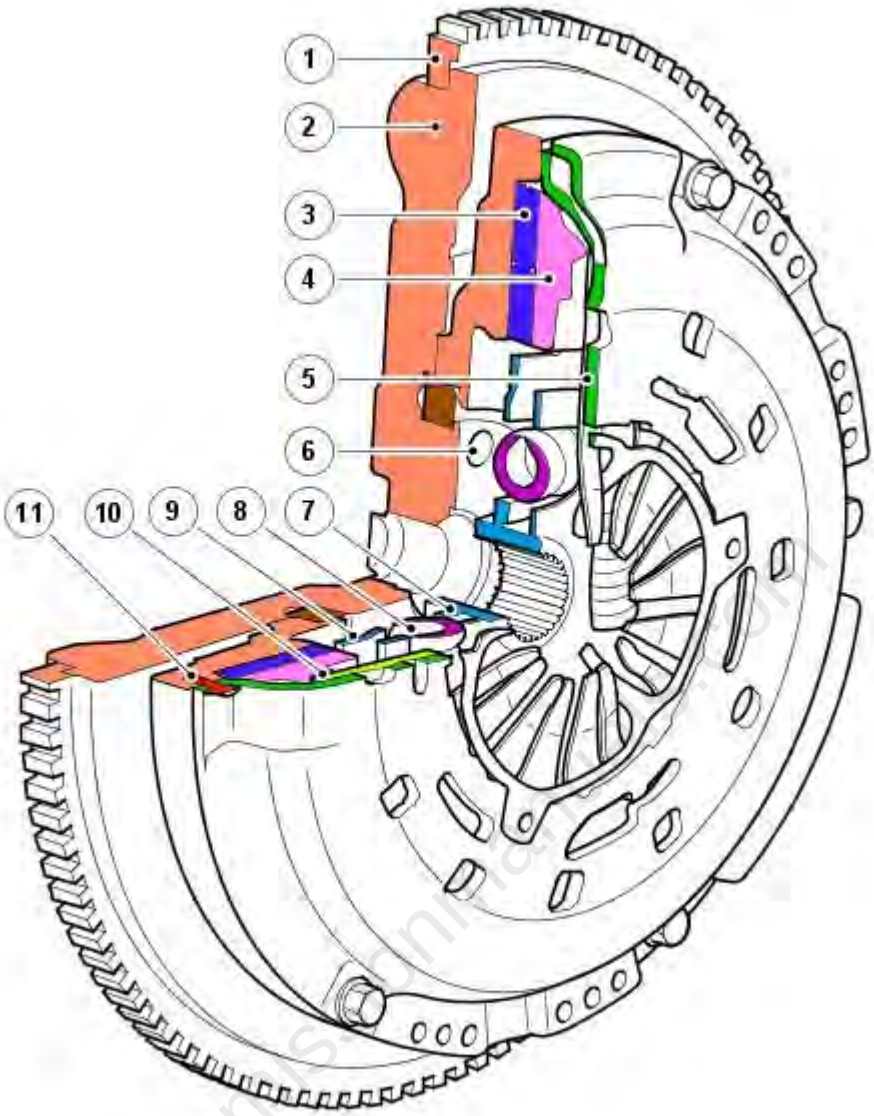

E47716

Item	Part Number	Description
1	-	Ring gear
2	-	Primary flywheel
3	-	Inner drive plate
4	-	Spring housing
5	-	Cover
6	-	Mounting hole
7	-	Splined hub
8	-	Damper springs
9	-	Inner drive plate
10	-	Spring housing
11	-	Secondary flywheel

As the name implies, this assembly consists of two main assemblies; the primary side, which is secured to the crankshaft with eight fixing's, and the secondary side to which the clutch cover assembly is secured.

The primary side carries the starter ring gear, and a roller bearing into which the long gearbox input shaft is supported.

The secondary side provides the surface to which the clutch friction material contacts, and is fitted with three dowels and 6 fixing holes, which are used to secure the clutch cover to the flywheel.

It is recommended that new crankshaft fixing's are used when removing or replacing a flywheel.

The secondary side is supported by the primary side on a bearing and radial springs.

The freedom of rotational movement between the primary and secondary masses acts as a damper, reducing torsional vibration levels between the crankshaft and the transmission.

transmissionmanuals.com

Published: 11-May-2011

Clutch - TDV6 2.7L Diesel - Pilot Bearing

Removal and Installation

Special Tool(s)	
	Pilot (spigot) bearing installer/clutch alignment 303-1096

Removal

1. WARNING: Do not work on or under a vehicle supported only by a jack. Always support the vehicle on safety stands.

   Raise and support the vehicle.

2. Remove the flywheel.
   For additional information, refer to: Flywheel (303-01A Engine - TDV6 2.7L Diesel, In-vehicle Repair).

3. Remove the pilot bearing.

   - With the flywheel supported, use a drift.

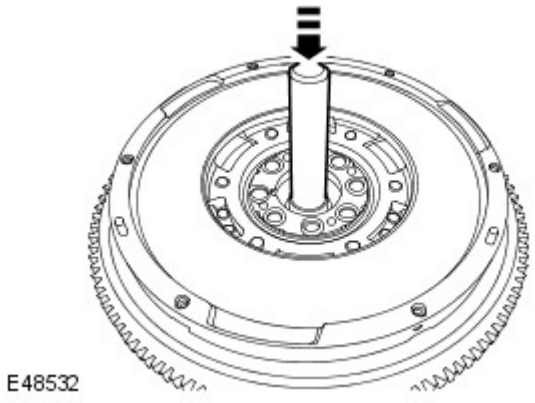

Installation

1. Using the special tool, install the pilot bearing.

   - Clean the component mating faces.

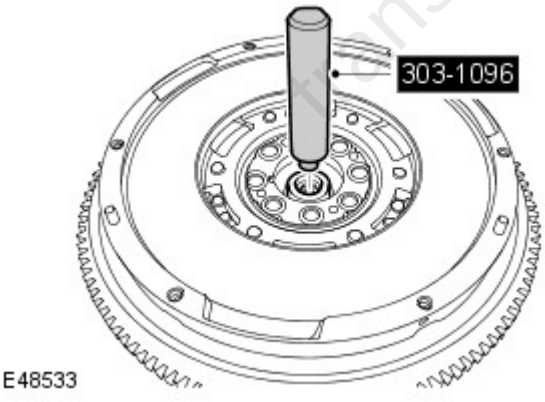

2. Install the flywheel.
   For additional information, refer to: Flywheel (303-01A Engine - TDV6 2.7L Diesel, In-vehicle Repair).

transmissionmanuals.com

Published: 11-May-2011

Clutch - TDV6 2.7L Diesel - Clutch Disc and Pressure Plate

Removal and Installation

Special Tool(s)	
	Pilot (spigot) bearing installer/clutch alignment 303-1096

Removal

1. WARNING: Do not work on or under a vehicle supported only by a jack. Always support the vehicle on safety stands.

Raise and support the vehicle.

2. Remove the transmission.
For additional information, refer to: Transmission (308-03 Manual Transmission/Transaxle - TDV6 2.7L Diesel, Removal).



3. CAUTION: Working in a diagonal sequence, progressively loosen the bolts.

- NOTE: Restrain the flywheel.

Remove the pressure plate and clutch disc.

- Remove the 6 bolts.

Installation

transmissionmanuals.com

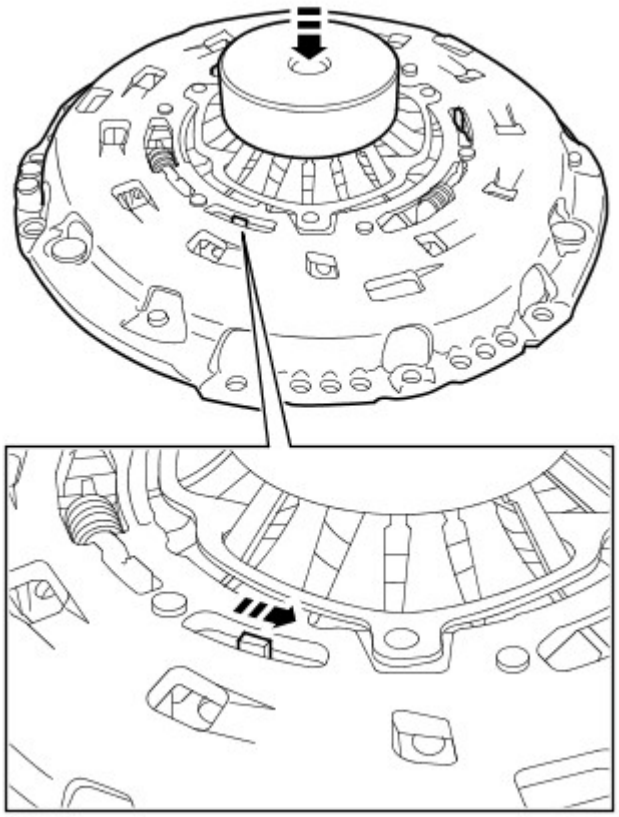
E54194

1. NOTE: The clutch cover is self adjusting. It is recommended that a clutch disc and clutch cover is replaced as an assembly. If a used clutch cover is assembled with a new clutch disc, the clutch cover adjustment must be reset prior to assembly. With the clutch cover supported under its outside edge, press down evenly on the diapragm fingers as shown, until the clutch cover adjustment ring can be rotated fully counterclockwise. With the adjustment ring held in this position, release the pressure on the diaphragm fingers. The adjustment ring will be held in this position until self adjustment on the application of the clutch pedal.

Check, and if necessary, reset the clutch pressure plate.

2. CAUTIONS:

Examine the flywheel for signs of scoring or overheating. Renew if worn or damaged.

Examin the clutch release bearing for signs of wear or damage. Renew if necessary.

Examine the spigot bearing for signs of wear or damage. Renew if necessary.

Clean the component mating faces.

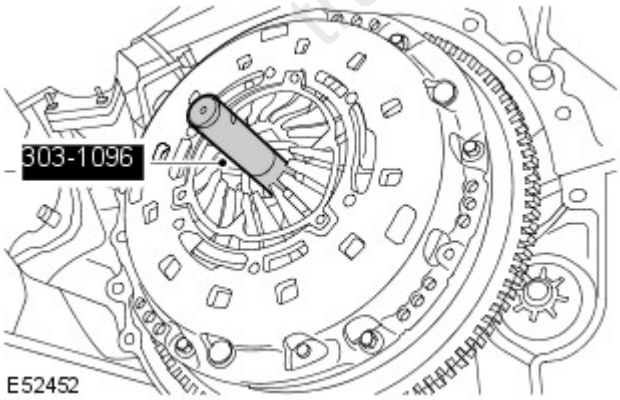

E52452

3. CAUTIONS:

Install the clutch disc with 'TRANSMISSION SIDE' marking against the clutch cover.

Use the special tool to align the components.

Working in a diagonal sequence, progressively tighten the bolts.

- NOTE: Restrain the flywheel.

Install the clutch disc and pressure plate.

- Tighten the bolts to 25 Nm (18 lb.ft).

4. Install the transmission.
For additional information, refer to: Transmission (308-03 Manual Transmission/Transaxle - TDV6 2.7L Diesel, Removal).

transmissionmanuals.com